SIMPLY STAINLESS

www.simplystainless.com

Modular sinks tables and shelves

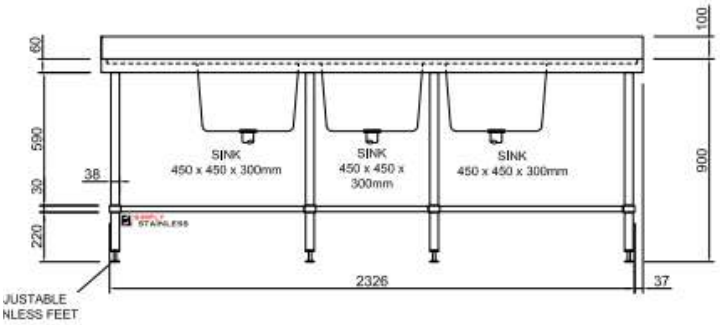

SPECIFICATION	
Tops	1.2mm gauge, high quality stainless steel, no. 4 finish, 3 of 450 x 450 x 300 welded bowl w/ sink waste, 100mm upstand (150mm bevelled upstand on 700 series), 20mm wet edge, 70 litre bowls, supplied with 3 x Watermark approved 90mm waste with basket
Core	3mm zincalume, marine grade protective paint
Frames	38mm round stainless steel tube, satin polished, machined collars, adjustable stainless disc feet
Undershelves	22mm round Stainless Steel tube pot rail

24	TRIPLE BOWL SINK	
	Product Code	Dimensions
	24.6.2400	2400mm x 600mm x 900mm
	24.7.2400	2400mm x 700mm x 900mm